CMG1 EMCA Paddle Card Reference Design

Table Of Contents

Sheet	Description
1	Table of Contents
2	Type-C Plug / WirePad
3	CMG1 9-CSP

Revision History

Revision	Date	Revision Summary
1	02-06-2018	Initial Release
2	06-05-2018	Changed CMG1's ball B3, C2 and C3 to optional ground for board mfg ease

Title: CMG1 EMCA Paddle Card Reference Design		
Size: B	Document Number: <Doc>	Rev: 2
Date: Tuesday, June 05, 2018	Sheet 1 of 3	

Type-C Plug/WirePad

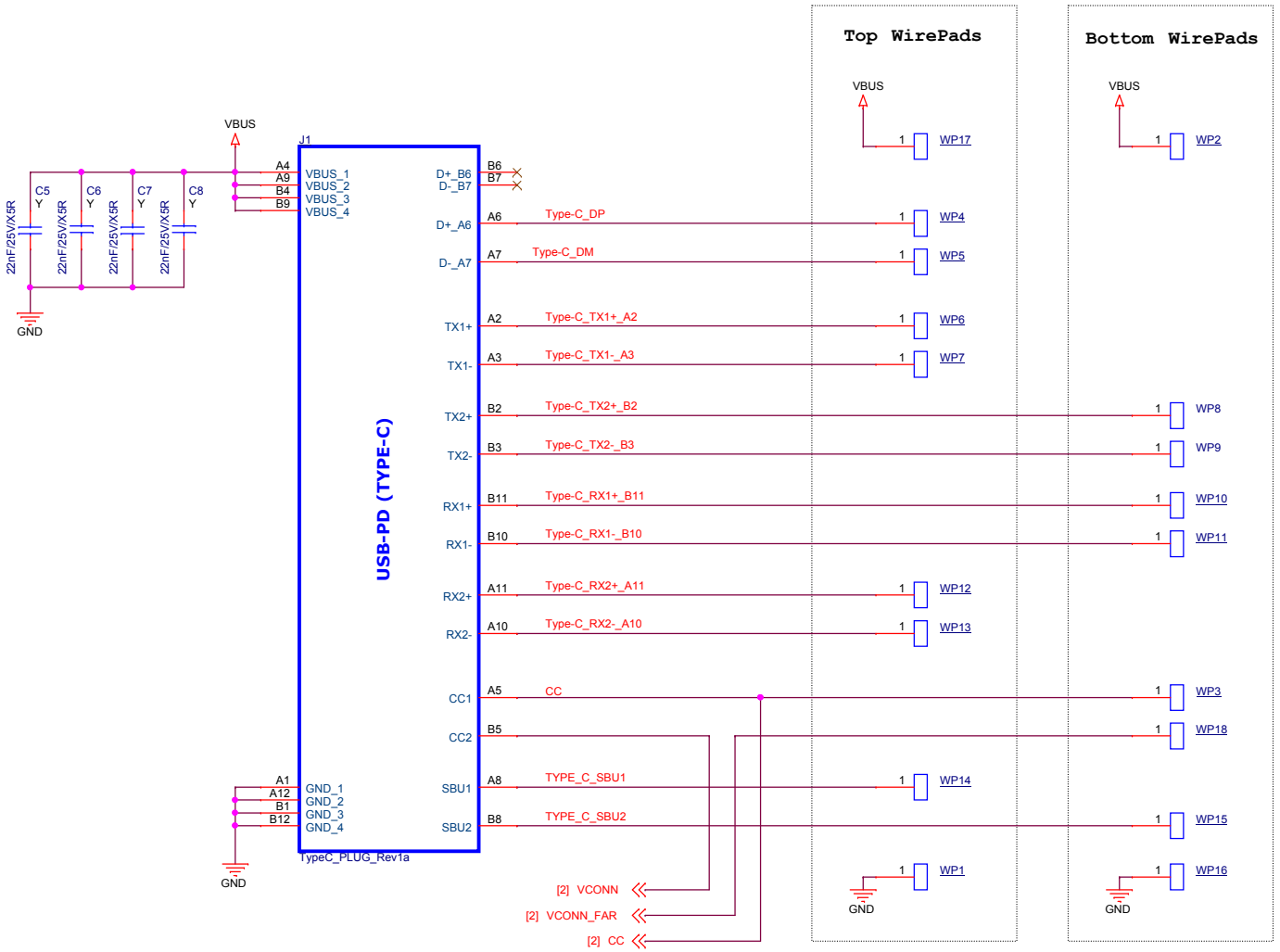

Title	CMG1 EMCA Paddle Card Reference Design	
Size B	Document Number <Doc>	Rev 2
Date: Tuesday, June 05, 2018	Sheet 2 of 3	

CMG1 9-CSP

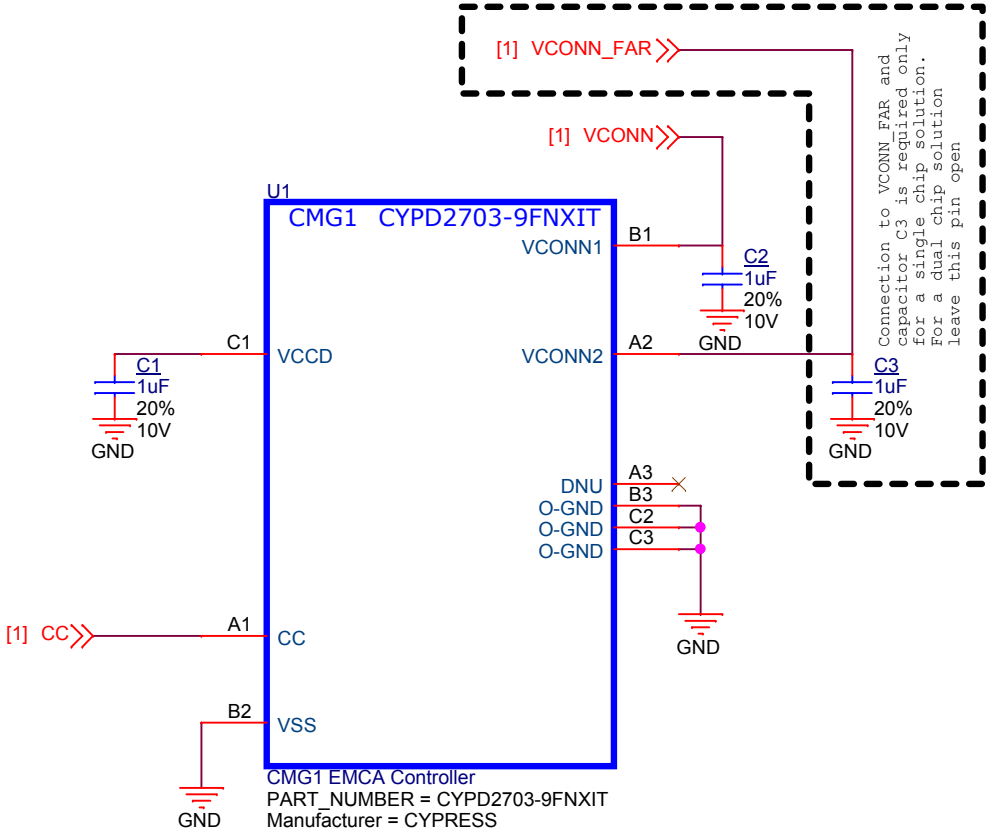

Note: The schematics are exactly same for
Thunderbolt passive cables using CYPD2704-09FNXIT

Title: CMG1 EMCA Paddle Card Reference Design		
Size: A	Document Number: <Doc>	Rev: 2
Date: Tuesday, June 05, 2018	Sheet 3 of 3	